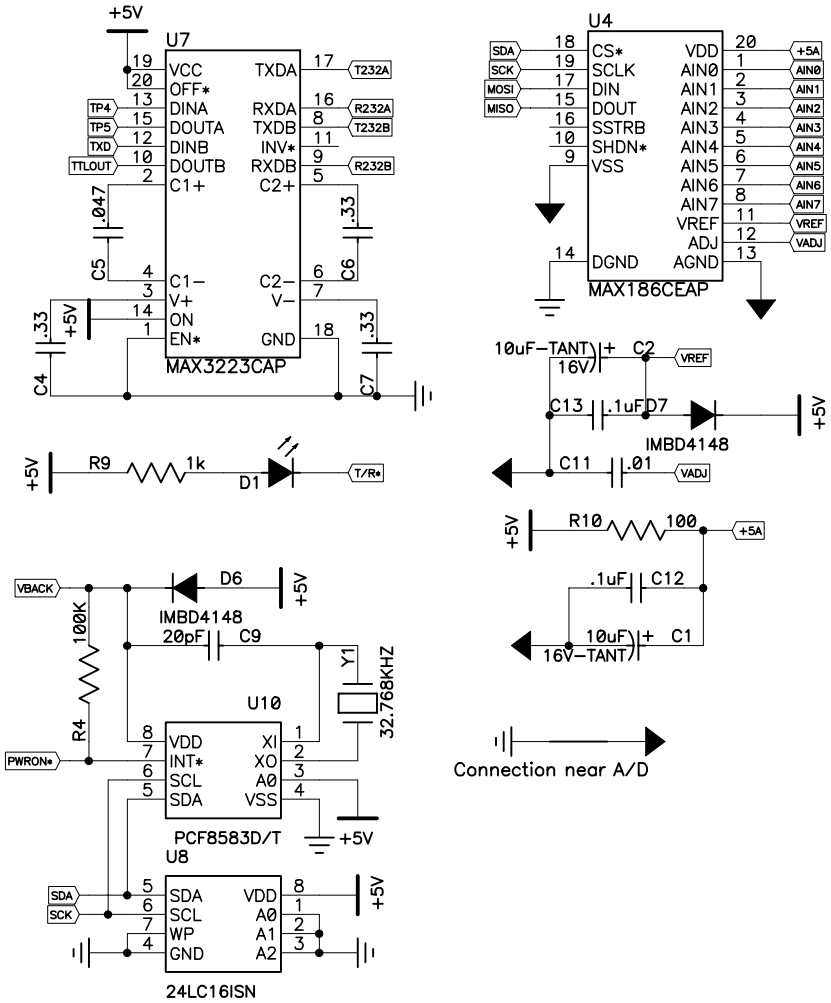

IO Functions Unavail
CSBOOT
CS0 – RAM WR
CS1 – RAM WR
CS2 – RAM OE
CS6 – A19
CS7 – A20
CS10– Flash
AVEC – SDA, CSADC
RMC – EN LCD
TP4 – TxDB
TP5 – RxDB
–
IO Used but avail
IRQ1* – VAST
MODCK – T/R
TP0 – KC0
TP1 – KC1
TP2 – KC2
TP3 – KC3
TP4 – TxDB
TP5 – RxDB
TP6 – Beep

Revision History
1.1 – Initial release
1.2 – add low power CS3* option

Drawn	Date	VESTA TECHNOLOGY, INC.
ses	Mon Oct 25 1999	(303)422–8088
Master Card 2000–332		Rev 1.x
MC2332_R1x.sch		Page 2 of 2